MERCRUISER (175 (2 BBL.) GM 262 V-6 1987)
Serial Nbr Range: 0B527955 THRU 0B773242 ()

FLYWHEEL HOUSING

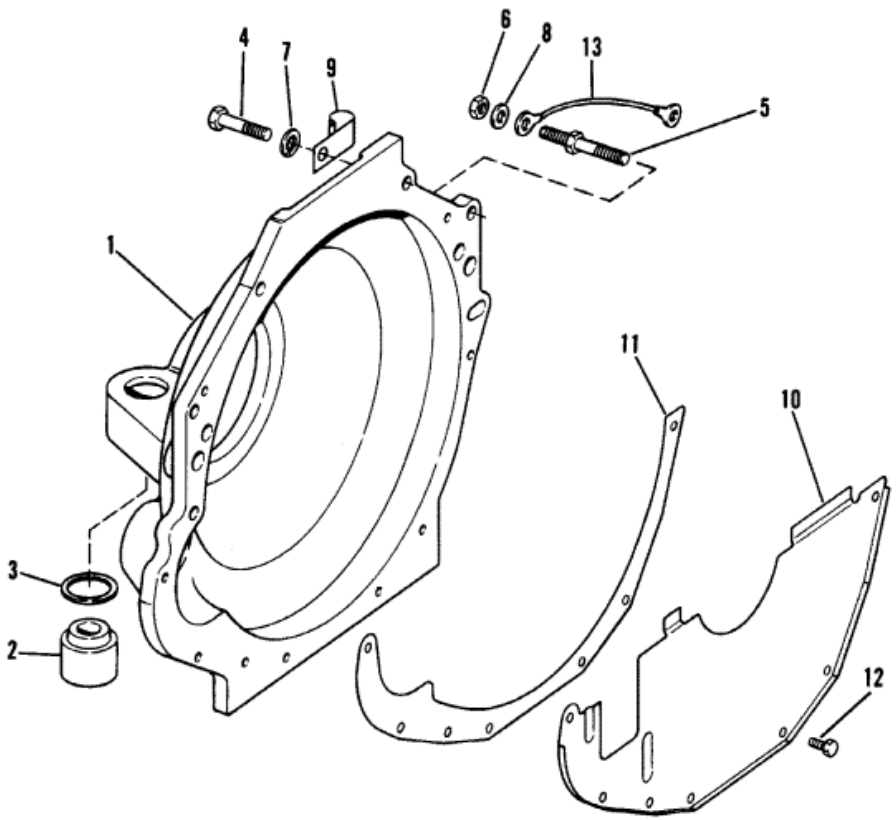

Parts List

Ref	Class	Part	Description	Qty	Comment	Footnote
1		12675A 5	FLYWHEEL HOUSING	1		
2		99297A 2	MOUNT, RUBBER - FLYWHEEL	2		
3	23	99322	SPACER, RUBBER MOUNT - FL	2		
4	10	37612	SCREW, FLYWHEEL HOUSING A	4		
4	10	35870	SCREW, FLYWHEEL HOUSING A	1		
5	16	64066	STUD, FLYWHEEL HOUSING AT	1		
6	11	32219	NUT, FLYWHEEL HOUSING ATT	1		
7	13	35048	LOCKWASHER, FLYWHEEL HOU	7		
8	12	20572	WASHER, FLYWHEEL HOUSING	1		
9	54	78945	"J" CLAMP, FLYWHEEL HOUSIN	1		
9	54	92850	CLAMP	2		
10		13930A 3	COVER ASSEMBLY	1		
10		812600A 2	COVER ASSEMBLY (USE WITH F	1		
11	27	96274	GASKET	1		
12	10	32773	SCREW, COVER	7		
13	84	62826A 6	WIRE, FLYWHEEL HOUSING STU	1		